HOME SYSTEM P11

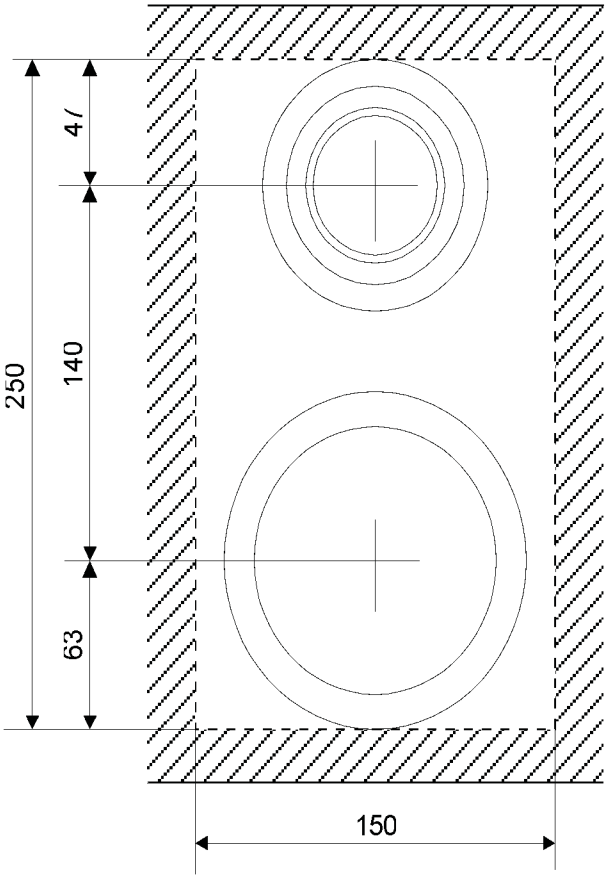

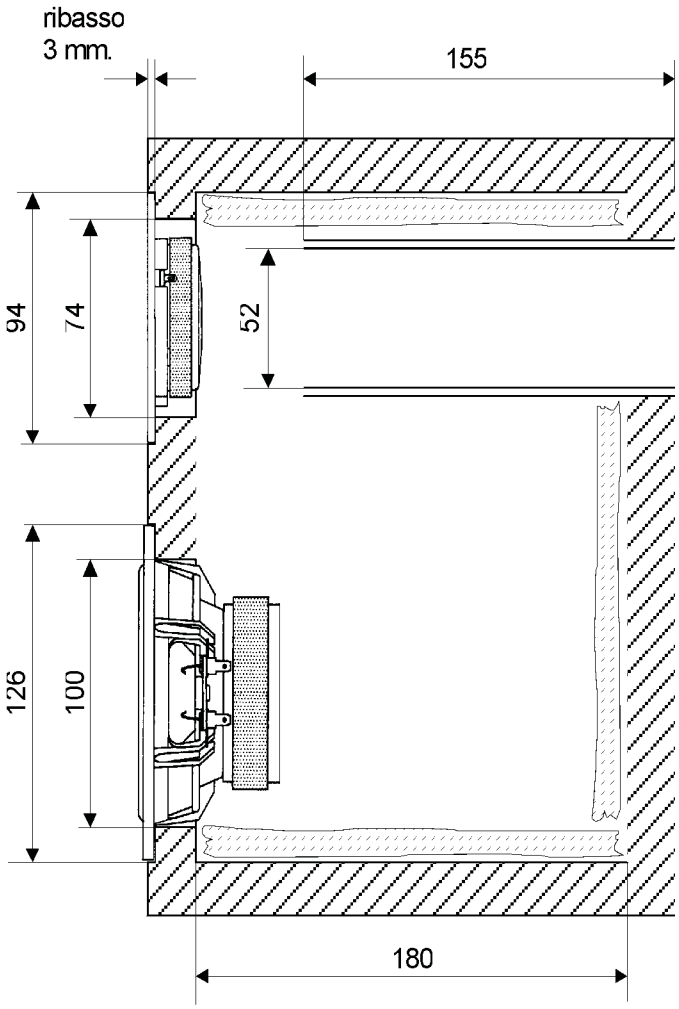

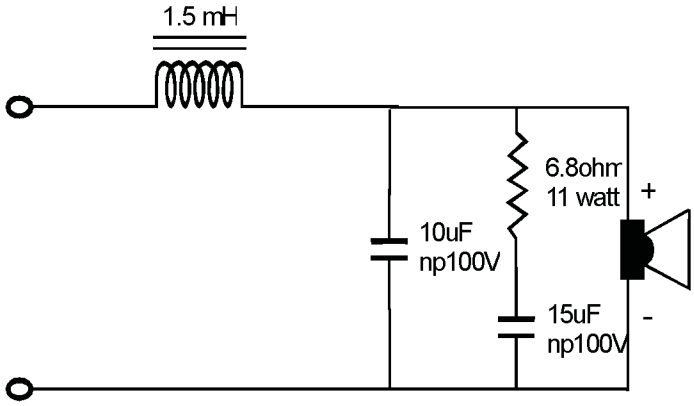

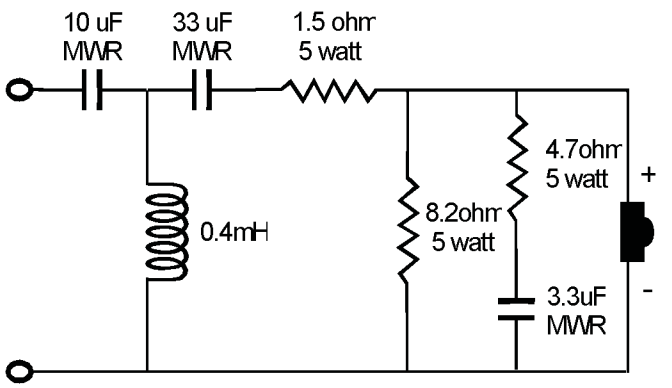

DESCRIZIONE COSTRUTTIVA

Mobile in MDF da 19 mm. di spessore sigillare bene ogni giuntura interna, applicare materiale fonoassorbente da 2.5- 3 cm. di spessore alle pareti come da disegno.
Per la costruzione del cross-over consigliamo l'utilizzo di componenti Tec Precision.

CARATTERISTICHE TECNICHE

Diffusore reflex a 2 vie
Woofer: P11WG-00-08
Tweeter:D20
Potenza nominale: 60 watt
Potenza musicale: 80 watt
Range riproducibile: 60Hz - 20KHz
Sensibilità (1W, 1m): 86dB

HOME SYSTEM P13

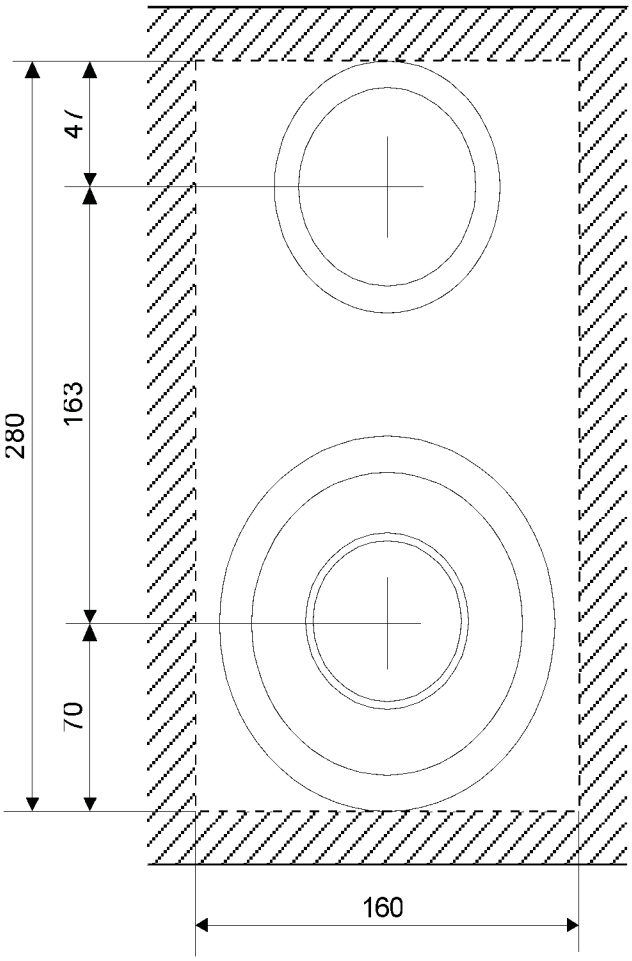

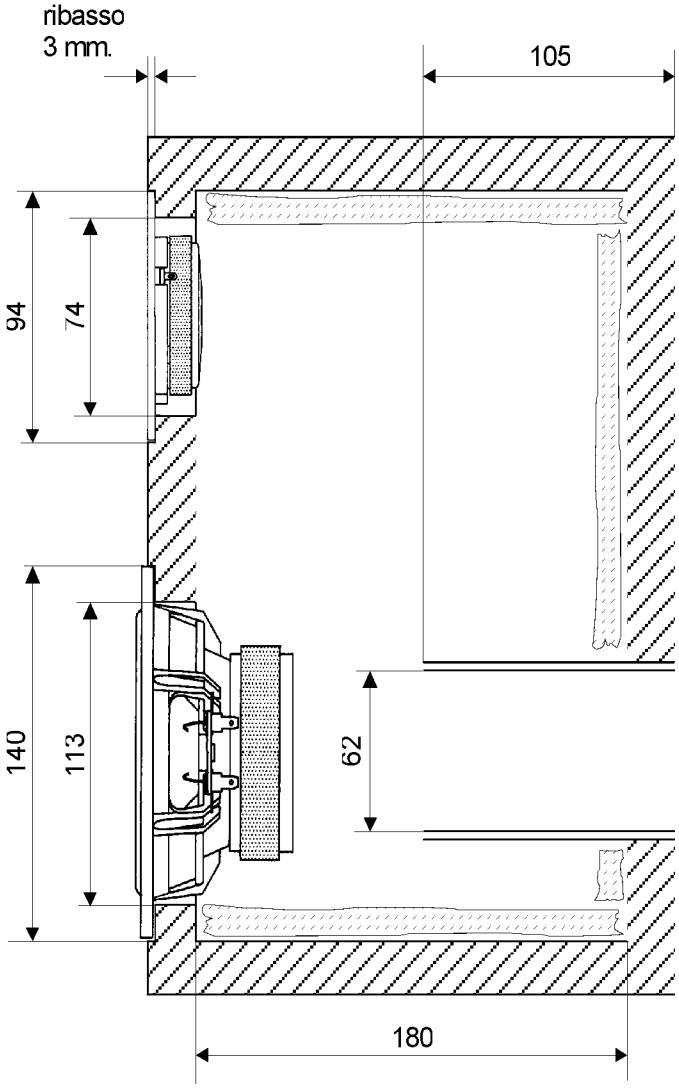

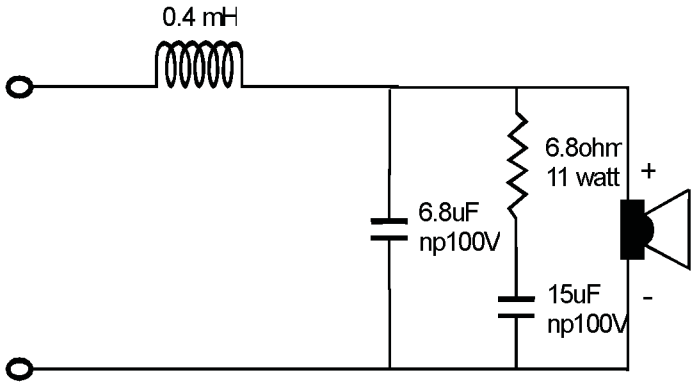

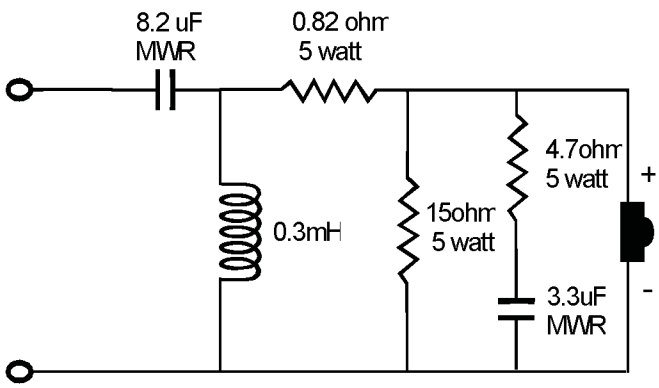

DESCRIZIONE COSTRUTTIVA

Mobile in MDF da 19 mm. di spessore sigillare bene ogni giuntura interna, applicare materiale fonoassorbente da 2.5- 3 cm. di spessore alle pareti come da disegno.
Per la costruzione del cross-over consigliamo l'utilizzo di componenti Tec Precision.

CARATTERISTICHE TECNICHE

Diffusore reflex a 2 vie
Woofer: P13WH-00-08
Tweeter:D20
Potenza nominale: 70 watt
Potenza musicale: 100 watt
Range riproducibile: 60Hz - 20KHz
Sensibilità (1W, 1m): 88dB

HOME SYSTEM P17

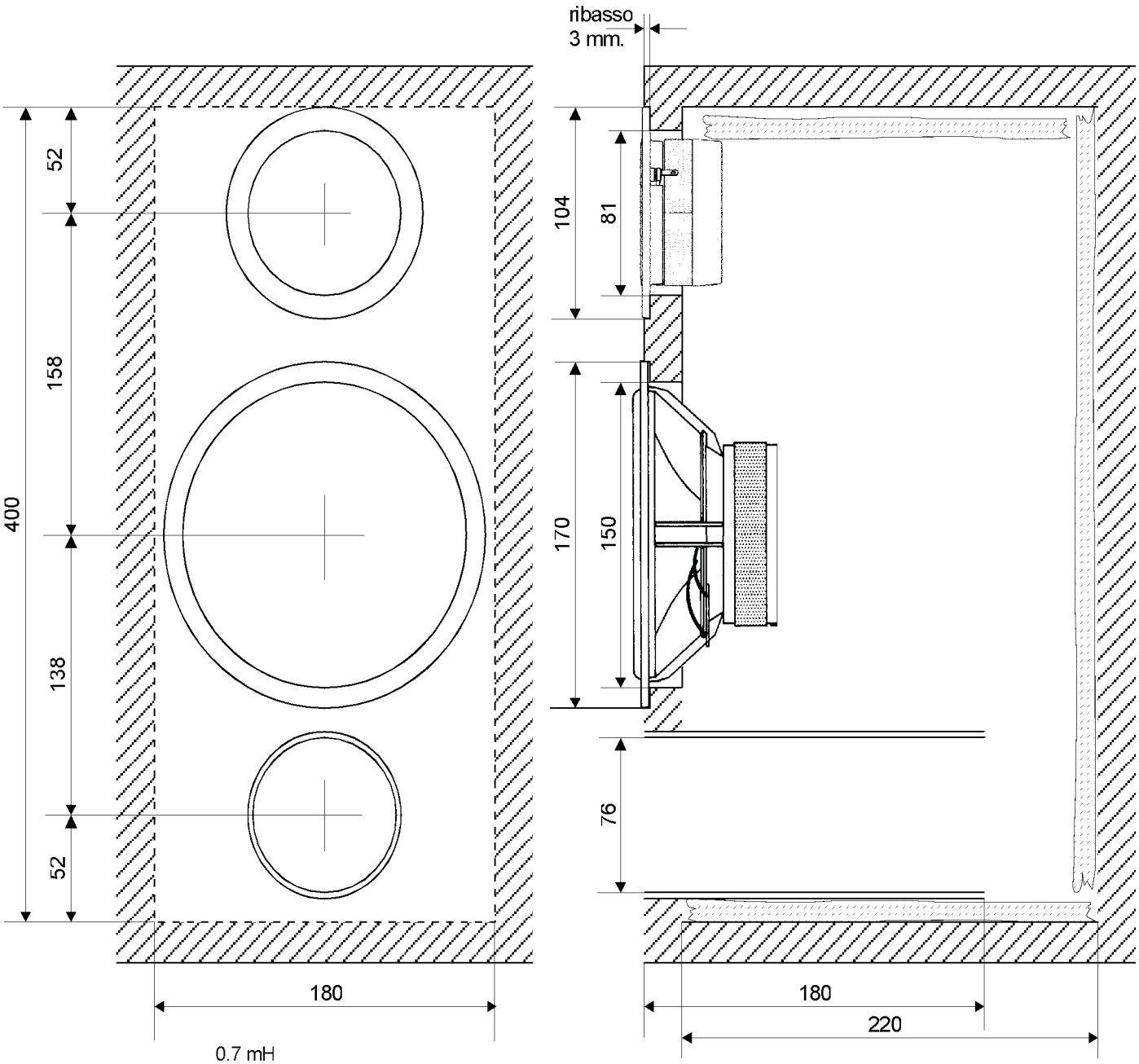

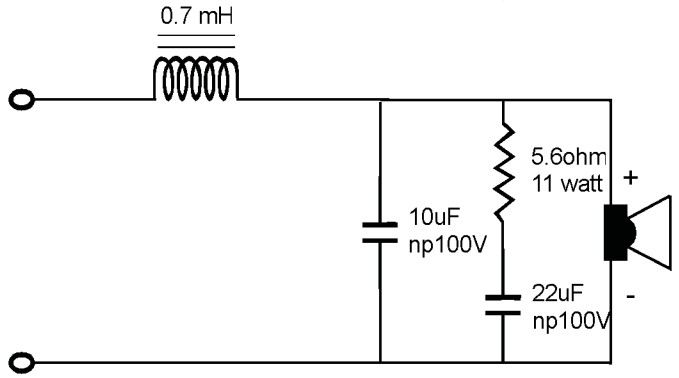

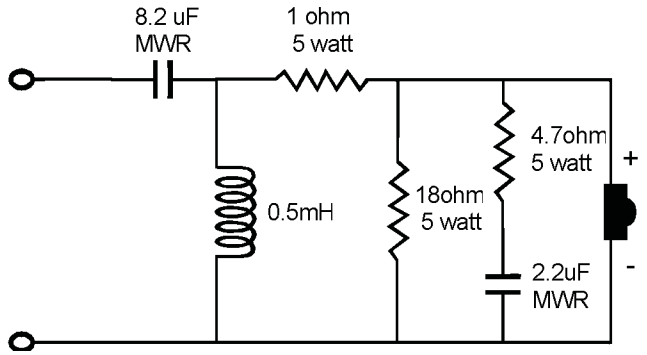

DESCRIZIONE COSTRUTTIVA

Mobile in MDF da 19 mm. di spessore sigillare bene ogni giuntura interna, applicare materiale fonoassorbente da 2.5- 3 cm. di spessore alle pareti come da disegno.
Per la costruzione del cross-over consigliamo l'utilizzo di componenti Tec Precision.

CARATTERISTICHE TECNICHE

Diffusore reflex a 2 vie
Woofer: P17WJ-00-08
Tweeter:PL27
Potenza nominale: 80 watt
Potenza musicale: 120 watt
Range riproducibile: 48Hz - 25KHz
Sensibilità (1W, 1m): 89dB

CANALE CENTRALE TC14

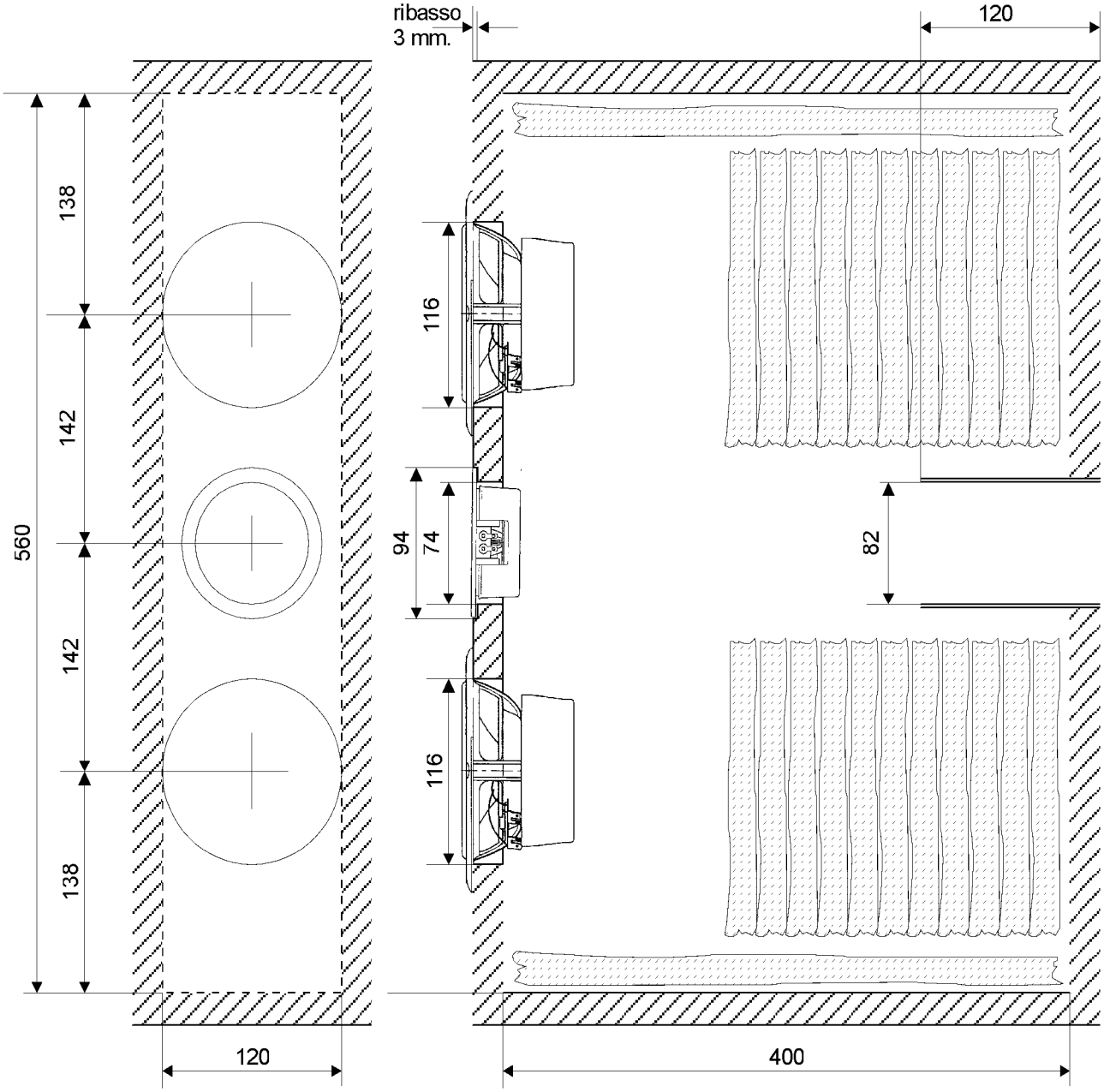

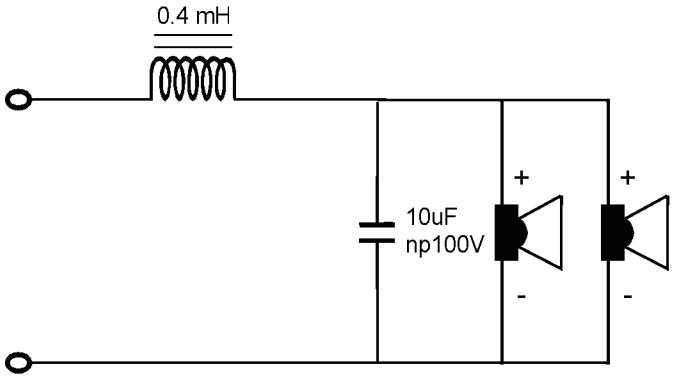

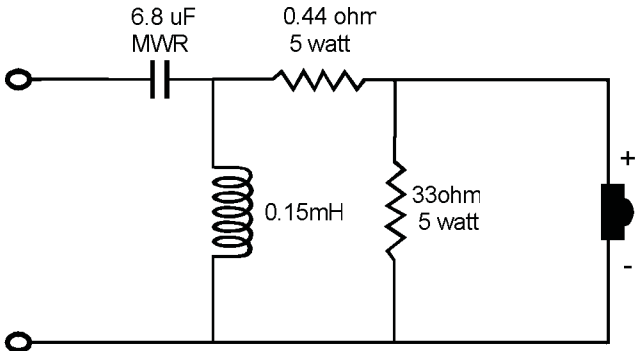

Mobile in MDF da 19 mm. di spessore sigillare bene ogni giuntura interna, applicare materiale fonoassorbente da 2.5- 3 cm. di spessore alle pareti come da disegno.
Posizionare il diffusore preferibilmente sotto al televisore.
Per la costruzione del cross-over consigliamo l'utilizzo di componenti Tec Precision.

CARATTERISTICHE TECNICHE

Diffusore reflex a 2 vie
Woofer: TC14 schermato 2 pezzi
Tweeter:TC20 schermato
Potenza nominale: 70 watt
Potenza musicale: 110 watt
Range riproducibile: 45Hz - 20KHz
Sensibilità (1W, 1m): 89dB

CORSAIR

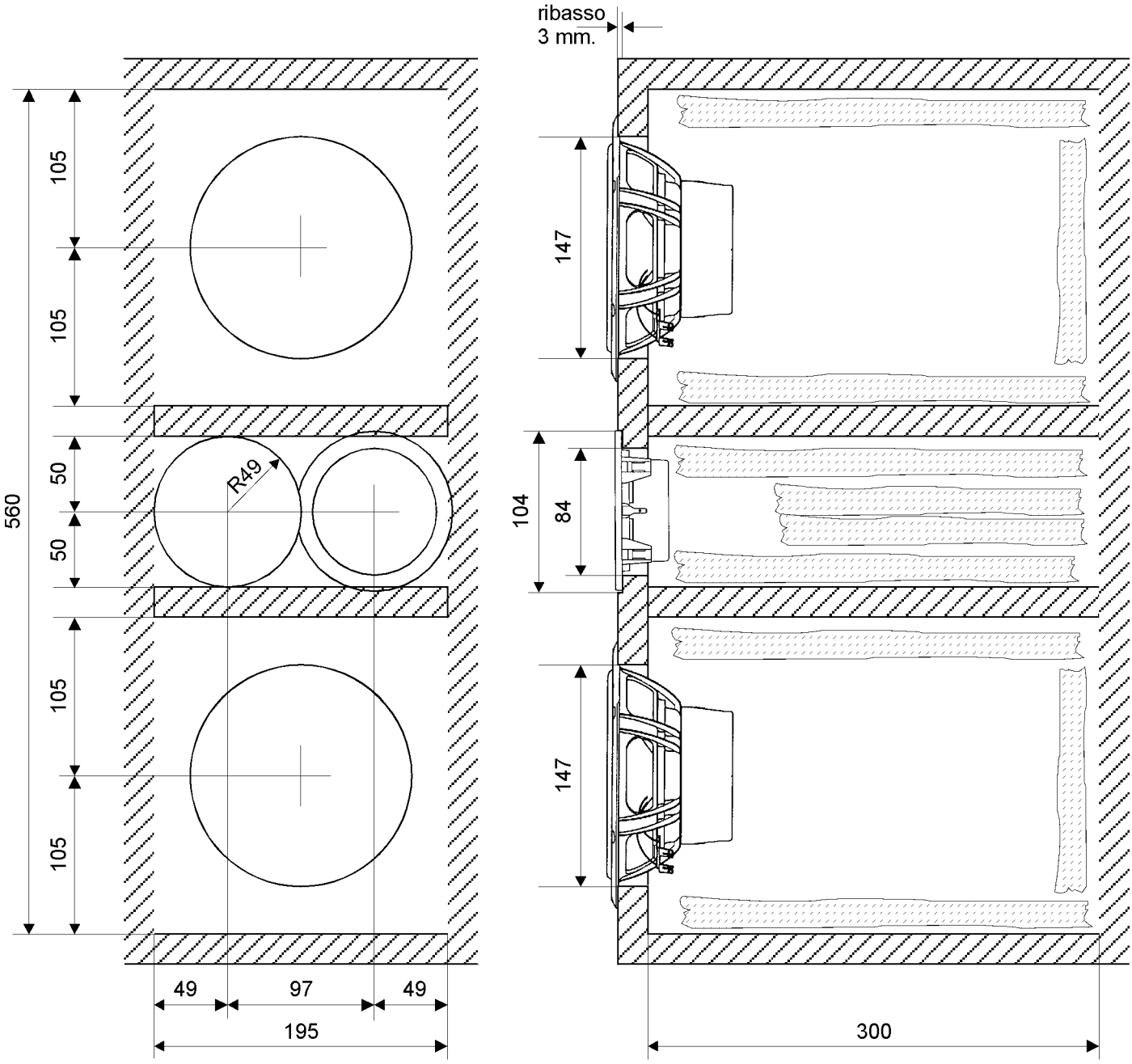

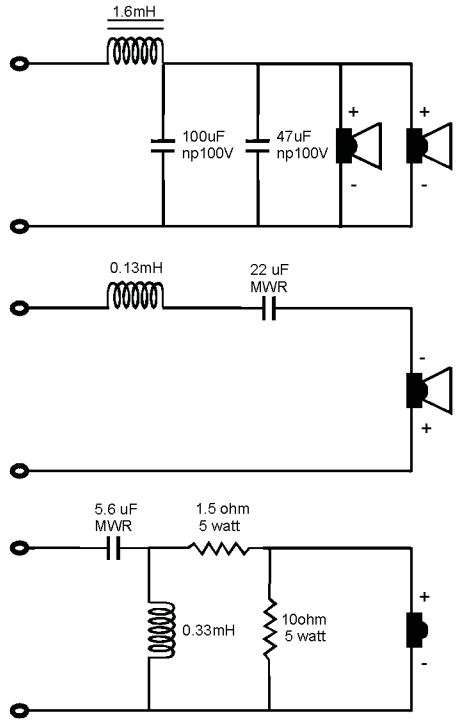

Mobile in MDF da 19 mm. di spessore sigillare bene ogni giuntura interna, applicare materiale fonoassorbente da 2.5- 3 cm. di spessore alle pareti come da disegno.
Posizionare il diffusore preferibilmente sotto al televisore.
Per la costruzione del cross-over consigliamo l'utilizzo di componenti Tec Precision.

CARATTERISTICHE TECNICHE

Diffusore a 3 vie
Woofer: TC18 schermato 2 pezzi
Midrange: TC11 schermato
Tweeter: TC26 schermato
Potenza nominale: 90 watt
Potenza musicale: 160 watt
Range riproducibile: 84Hz - 22KHz
Sensibilità (1W, 1m): 90dB

CANALE EFFETTI
WILDCAT

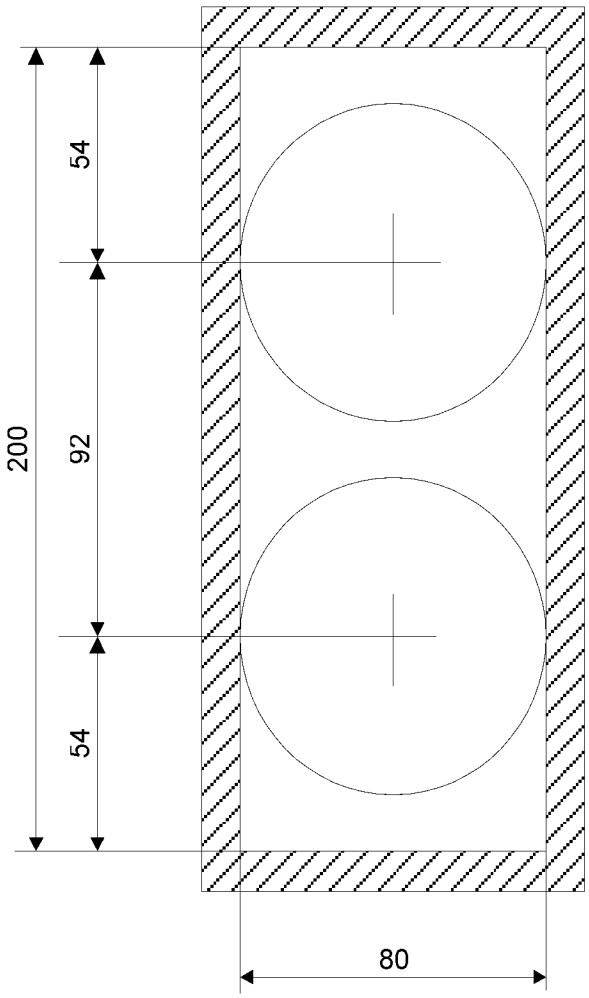

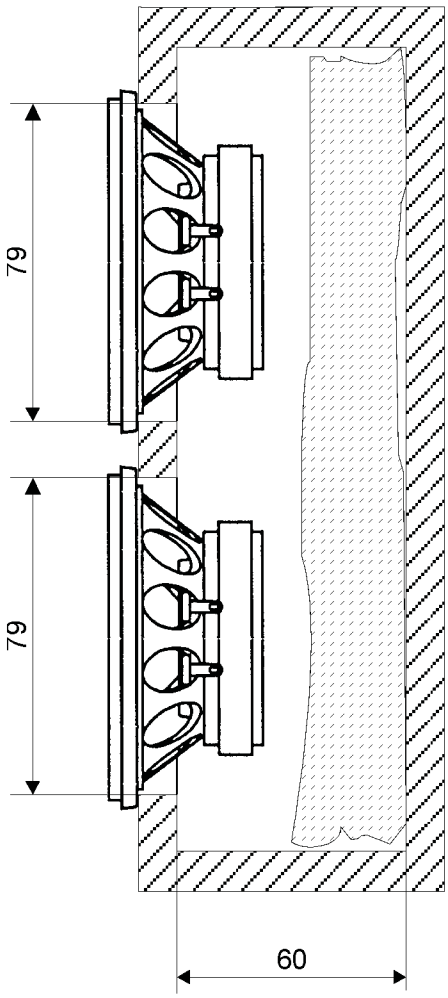

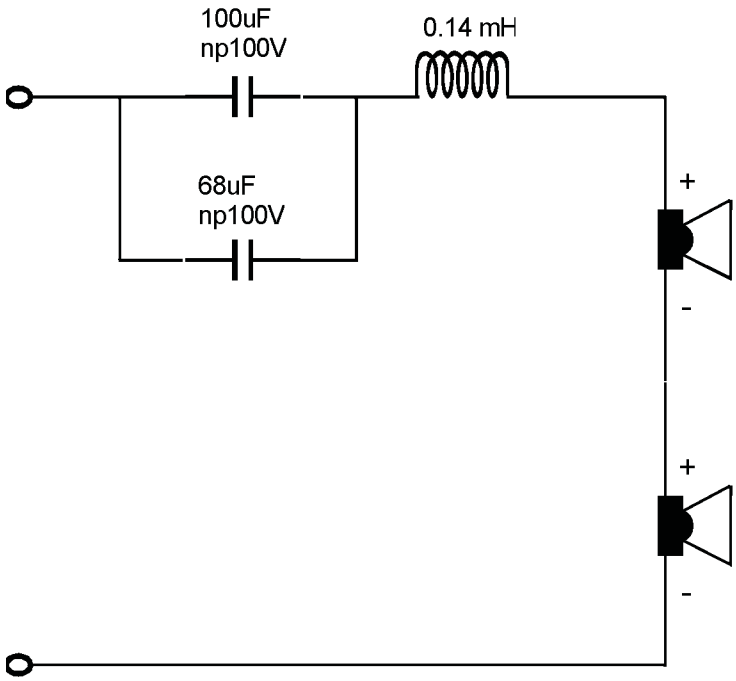

DESCRIZIONE COSTRUTTIVA

Mobile in MDF da 10 mm. di spessore sigillare bene ogni giuntura interna, applicare materiale fonoassorbente da 2.5- 3 cm. di spessore alle pareti come da disegno.
Per la costruzione del cross-over consigliamo l'utilizzo di componenti Tec Precision.

CARATTERISTICHE TECNICHE

Diffusore in sospensione pneumatica
Altoparlanti: S09 larga banda
Potenza nominale: 30 watt
Potenza musicale: 50 watt
Range riproducibile: 150Hz -7KHz
Sensibilità (1W, 1m): 90dB

HURRICANE

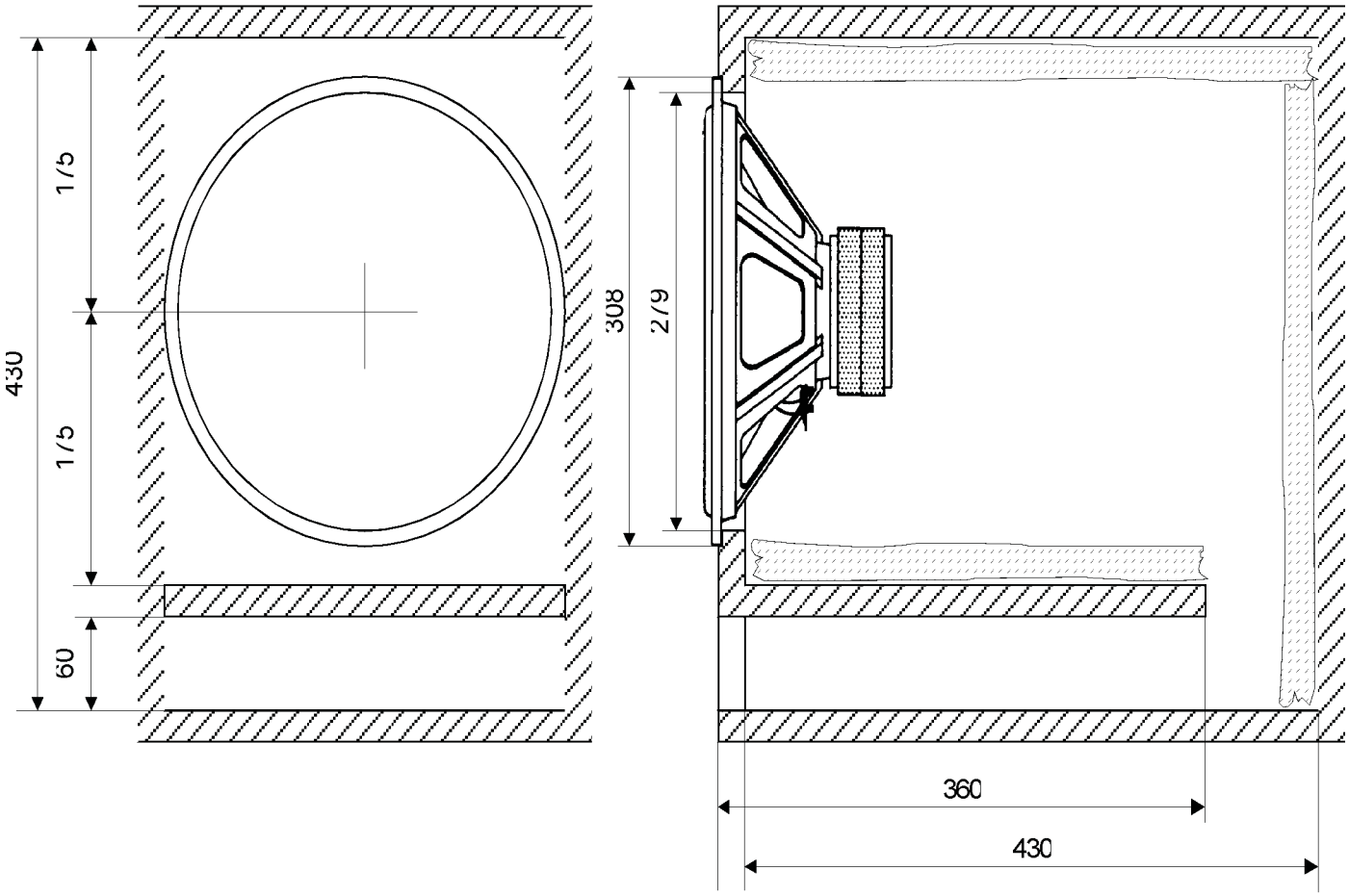

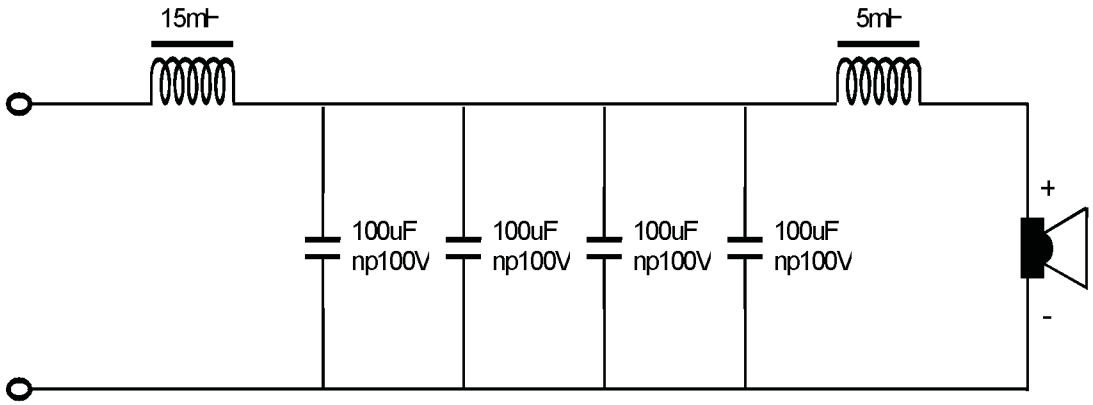

Mobile in MDF da 19 mm. di spessore sigillare bene ogni giuntura interna, applicare materiale fonoassorbente da 2.5- 3 cm. di spessore alle pareti come da disegno.
Per la costruzione del cross-over consigliamo l'utilizzo di componenti Tec Precision.

CARATTERISTICHE TECNICHE

Sistema subwoofer reflex
Woofer: M30
Potenza nominale: 100 watt
Potenza musicale: 150 watt
Range riproducibile: 24Hz - 90KHz
Sensibilità (1W, 1m): 93dB

D19

* Cupola in polipropilene

* Buona risposta in frequenza fuori asse

* Ferrofluido a bassa viscosità ed elevata stabilità nel tempo per ridurre al minimo lo smorzamento meccanico nel motore.

* Elevata tenuta in potenza

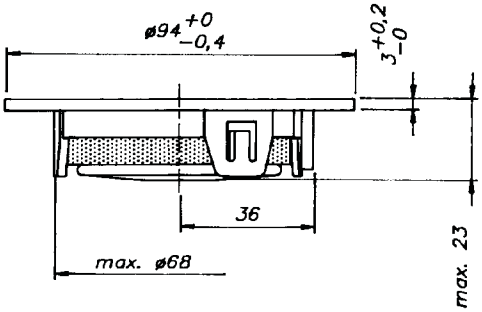

Frequency range	3 - 20	KHz
Equivalent volume, Vas	---	L
Compliance, Cms	---	mm/N
Mechanical resistance, Rms	---	Ns/m
Effective diaphragm/cone area, Sd	4.2	cm2
Voice coil diameter	19	mm
Voice coil height	1.4	mm
Air gap height	2	mm
Nominal impedance	8	ohm
Voice coil resistance	6.2	ohm
Voice coil inductance	---	mH
Free air resonance, Fs	1700	Hz
Sensitivity, Spl (1W,1m)/(2.83V/1m)	89/89	dB
Force factor, Bxl	2.6	Tm
Moving mass, Md	0.20	g
Qms	---	
Qes	---	
Qts	---	
Nominal power*	80	W
Short term max power*	250	W
Long term max power*	130	W

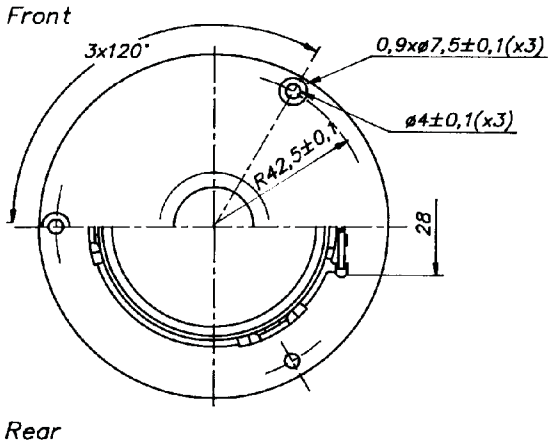

D20

* Cupola in seta trattata

* Assemblaggio VC "Butterfly"

* Ferrofluido a bassa viscosità ed elevata stabilità nel tempo per ridurre al minimo lo smorzamento meccanico nel motore.

* Riproduzione sonora neutrale

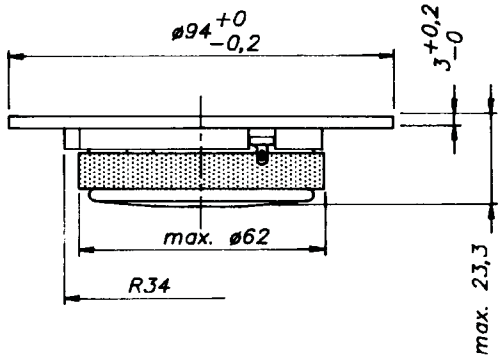

Frequency range	3 - 40	KHz
Equivalent volume, Vas	---	L
Compliance, Cms	---	mm/N
Mechanical resistance, Rms	---	Ns/m
Effective diaphragm/cone area, Sd	4.4	cm2
Voice coil diameter	20	mm
Voice coil height	1.3	mm
Air gap height	2	mm
Nominal impedance	6	ohm
Voice coil resistance	4.2	ohm
Voice coil inductance	---	mH
Free air resonance, Fs	1700	Hz
Sensitivity, Spl (1W,1m)/(2.83V/1m)	89/90	dB
Force factor, Bxl	2.2	Tm
Moving mass, Md	0.2	g
Qms	---	
Qes	---	
Qts	---	
Nominal power*	80	W
Short term max power*	250	W
Long term max power*	150	W

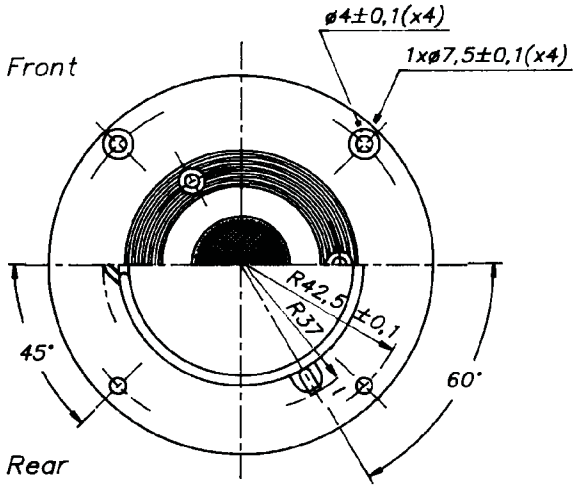

TC14

* Cestello in polimero rinforzato P6

* Cono con tecnologia NRSC e sospensione asimmetrica

* Bobina mobile ventilata attraverso il magnete

* Magneticamente schermato con doppio magnete

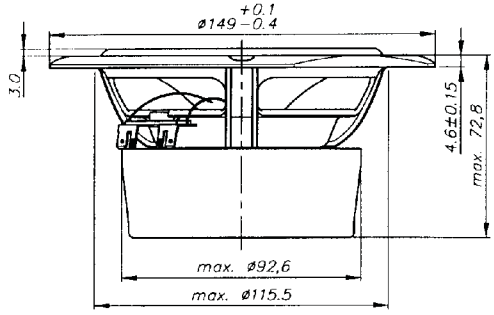

Frequency range	52 - 4000	Hz
Equivalent volume, Vas	12	L
Compliance, Cms	---	mm/N
Mechanical resistance, Rms	---	Ns/m
Effective diaphragm/cone area, Sd	80	cm2
Voice coil diameter	25	mm
Voice coil height	10	mm
Air gap height	4	mm
Nominal impedance	8	ohm
Voice coil resistance	5.5	ohm
Voice coil inductance	0.65	mH
Free air resonance, Fs	52	Hz
Sensitivity, Spl (1W,1m)/(2.83V/1m)	86/86	dB
Force factor, Bxl	5.0	Tm
Moving mass, Md	7.0	g
Qms	2.86	
Qes	0.50	
Qts	0.43	
Nominal power*	35	W
Short term max power*	110	W
Long term max power*	190	W

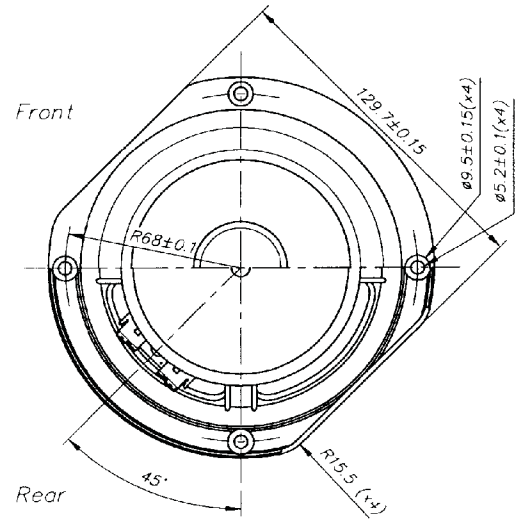

TC18

* Cestello in polimero rinforzato P6

* Cono con tecnologia NRSC e sospensione asimmetrica

* Bobina mobile ventilata attraverso il magnete

* Magneticamente schermato con doppio magnete

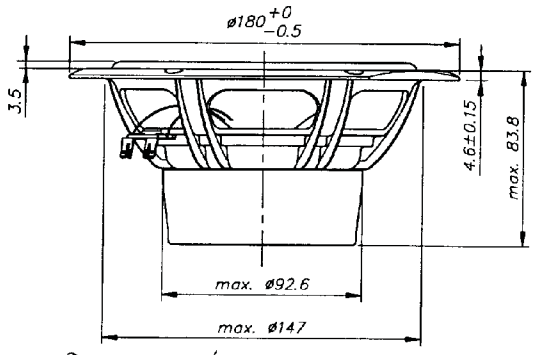

Frequency range	30 - 4000	Hz
Equivalent volume, Vas	38	L
Compliance, Cms	---	mm/N
Mechanical resistance, Rms	---	Ns/m
Effective diaphragm/cone area, Sd	138	cm2
Voice coil diameter	25	mm
Voice coil height	12	mm
Air gap height	4	mm
Nominal impedance	8	ohm
Voice coil resistance	5.5	ohm
Voice coil inductance	0.75	mH
Free air resonance, Fs	40	Hz
Sensitivity, Spl (1W,1m)/(2.83V/1m)	87/87	dB
Force factor, Bxl	5.0	Tm
Moving mass, Md	11.2	g
Qms	2.99	
Qes	0.62	
Qts	0.51	
Nominal power*	40	W
Short term max power*	225	W
Long term max power*	180	W

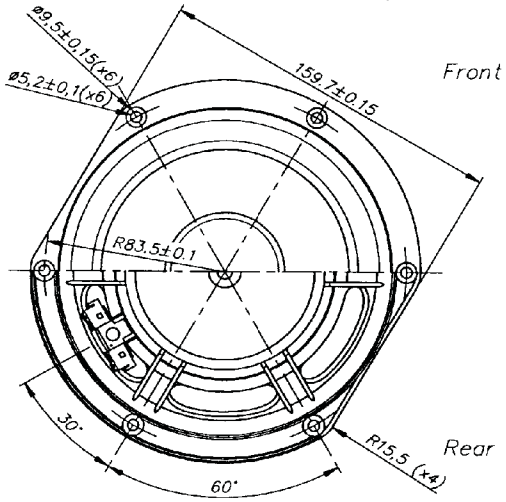

T25

* Cupola in seta trattata

* Piastra frontale dal design altamente specializzato per migliorare la risposta in frequenza.

* Ferrofluido a bassa viscosità ed elevata stabilità nel tempo per ridurre al minimo lo smorzamento meccanico nel motore.

* Elevata tenuta in potenza

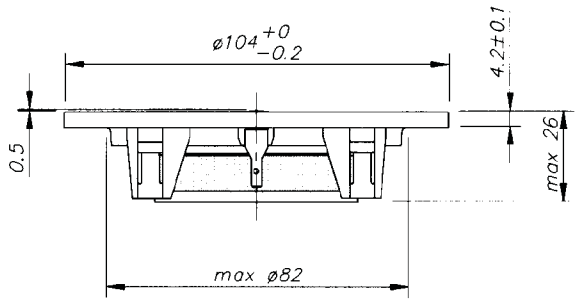

Frequency range	2 - 20	KHz
Equivalent volume, Vas	0.004	L
Compliance, Cms	---	mm/N
Mechanical resistance, Rms	2.43	Ns/m
Effective diaphragm/cone area, Sd	7.1	cm2
Voice coil diameter	25	mm
Voice coil height	1.6	mm
Air gap height	2.5	mm
Nominal impedance	6	ohm
Voice coil resistance	4.6	ohm
Voice coil inductance	---	mH
Free air resonance, Fs	1150	Hz
Sensitivity, Spl (1W,1m)/(2.83V/1m)	90/91	dB
Force factor, Bxl	2.9	Tm
Moving mass, Md	0.37	g
Qms	1.10	
Qes	1.48	
Qts	0.63	
Nominal power*	90	W
Short term max power*	400	W
Long term max power*	200	W

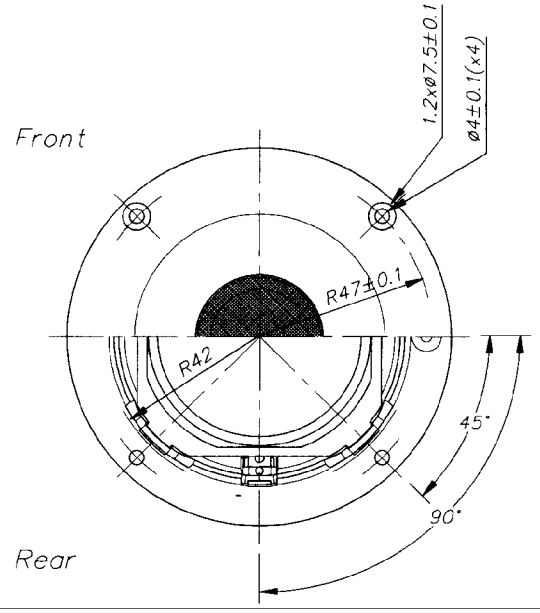

PL27

* Nuovo diaframma in seta migliorato anche nel peso per contribuire all' effetto smorzamento e alla risposta in frequenza assolutamente lineare sia in asse che fuori asse.

* Piastra frontale dal design altamente specializzato per migliorare la risposta in frequenza.

* Ferrofluido a bassa viscosità ed elevata stabilità nel tempo per ridurre al minimo lo smorzamento meccanico nel motore.

* Gruppo magnetico ventilato con camera posteriore per abbassare la frequenza di risonanza.

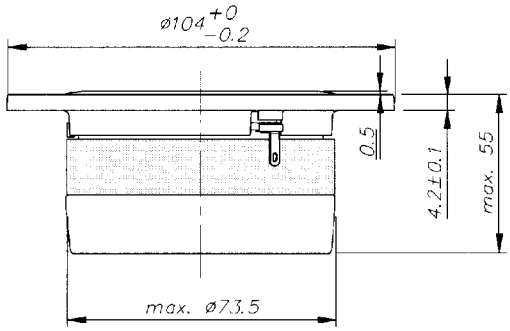

Frequency range	1.5 - 30	KHz
Equivalent volume, Vas	0.010	L
Compliance, Cms	0.14	mm/N
Mechanical resistance, Rms	1.3	Ns/m
Effective diaphragm/cone area, Sd	7.1	cm2
Voice coil diameter	25	mm
Voice coil height	1.6	mm
Air gap height	2	mm
Nominal impedance	6	ohm
Voice coil resistance	4.6	ohm
Voice coil inductance	---	mH
Free air resonance, Fs	750	Hz
Sensitivity, Spl (1W,1m)/(2.83V/1m)	90/91	dB
Force factor, Bxl	2.7	Tm
Moving mass, Md	0.32	g
Qms	1.17	
Qes	0.95	
Qts	0.52	
Nominal power*	100	W
Short term max power*	450	W
Long term max power*	225	W

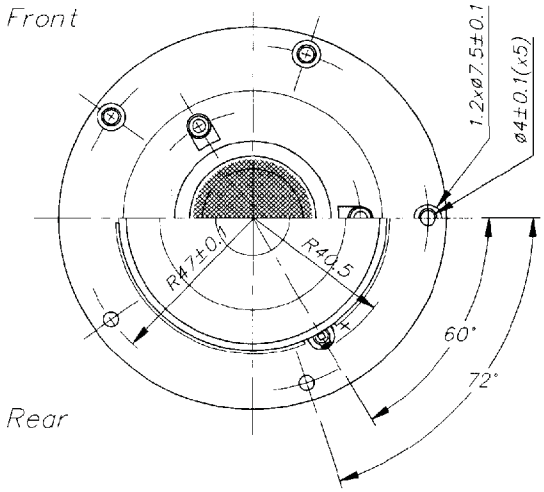

TC20

* Cupola in seta trattata.

* Risposta in frequenza molto lineare.

* Ferrofluido a bassa viscosità ed elevata stabilità nel tempo per ridurre al minimo lo smorzamento meccanico nel motore.

* Doppia schermatura magnetica.

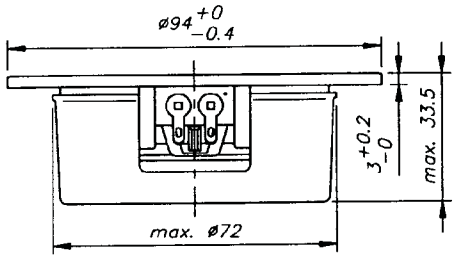

Frequency range	2.5 - 20	KHz
Equivalent volume, Vas	---	L
Compliance, Cms	---	mm/N
Mechanical resistance, Rms	---	Ns/m
Effective diaphragm/cone area, Sd	4.4	cm2
Voice coil diameter	20	mm
Voice coil height	1.3	mm
Air gap height	2	mm
Nominal impedance	6	ohm
Voice coil resistance	4.2	ohm
Voice coil inductance	---	mH
Free air resonance, Fs	1400	Hz
Sensitivity, Spl (1W,1m)/(2.83V/1m)	90/91	dB
Force factor, Bxl	1.9	Tm
Moving mass, Md	0.20	g
Qms	3.30	
Qes	1.86	
Qts	1.15	
Nominal power*	80	W
Short term max power*	360	W
Long term max power*	180	W

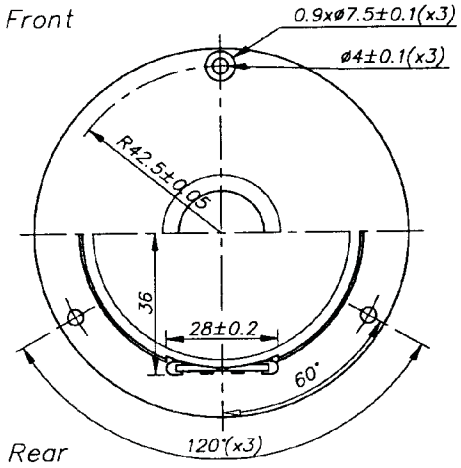

TC26

* Cupola in seta trattata.

* Risposta in frequenza molto lineare.

* Ferrofluido a bassa viscosità ed elevata stabilità nel tempo per ridurre al minimo lo smorzamento meccanico nel motore.

* Doppia schermatura magnetica.

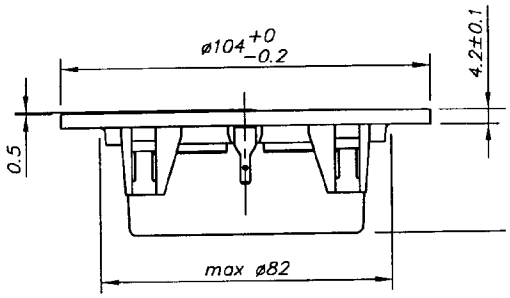

Frequency range	2 - 22	KHz
Equivalent volume, Vas	---	L
Compliance, Cms	---	mm/N
Mechanical resistance, Rms	---	Ns/m
Effective diaphragm/cone area, Sd	7.1	cm2
Voice coil diameter	25	mm
Voice coil height	1.5	mm
Air gap height	2.5	mm
Nominal impedance	6	ohm
Voice coil resistance	4.6	ohm
Voice coil inductance	---	mH
Free air resonance, Fs	1200	Hz
Sensitivity, Spl (1W,1m)/(2.83V/1m)	90/91	dB
Force factor, Bxl	2.5	Tm
Moving mass, Md	0.33	g
Qms	2.20	
Qes	1.83	
Qts	1.10	
Nominal power*	100	W
Short term max power*	400	W
Long term max power*	210	W

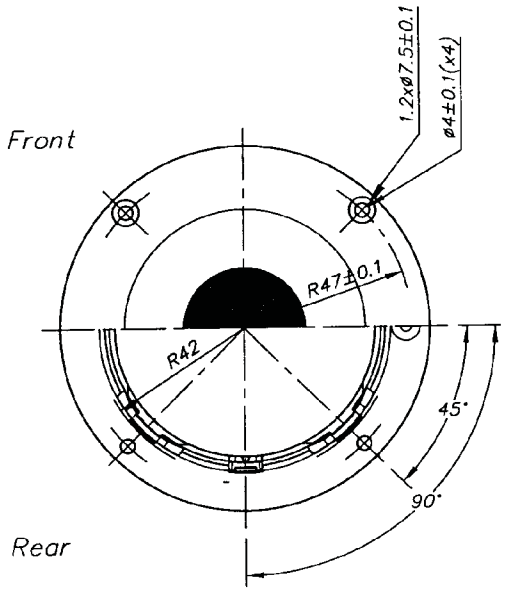

D75

* Cupola in seta trattata

* Peso ridotto delle parti in movimento

* Impedenza estremamente lineare

* Griglia interna di protezione della cupola

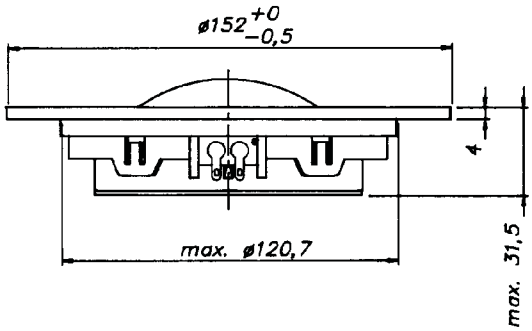

Frequency range	500 -6000	Hz
Equivalent volume, Vas	---	L
Compliance, Cms	---	mm/N
Mechanical resistance, Rms	---	Ns/m
Effective diaphragm/cone area, Sd	55	cm2
Voice coil diameter	76	mm
Voice coil height	3	mm
Air gap height	2	mm
Nominal impedance	8	ohm
Voice coil resistance	5.9	ohm
Voice coil inductance	---	mH
Free air resonance, Fs	300	Hz
Sensitivity, Spl (1W,1m)/(2.83V/1m)	92/92	dB
Force factor, Bxl	4.7	Tm
Moving mass, Md	3.3	g
Qms	---	
Qes	---	
Qts	---	
Nominal power*	80	W
Short term max power*	270	W
Long term max power*	150	W

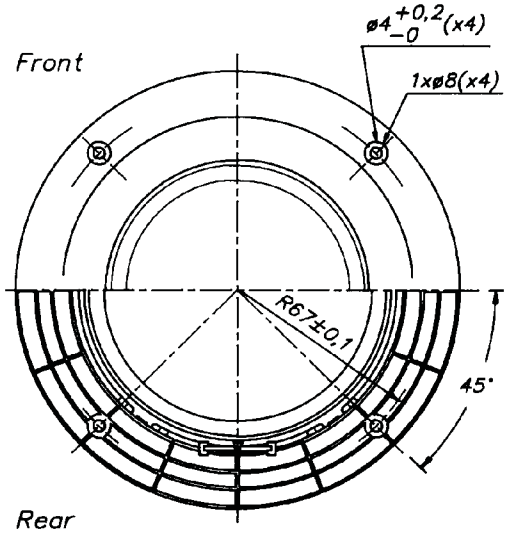

K10

* Bassa distorsione

* Cestello costruito con materiale plastico

* Risposta in frequenza molto estesa

* Cono in carta trattata

* Sospensione in gomma

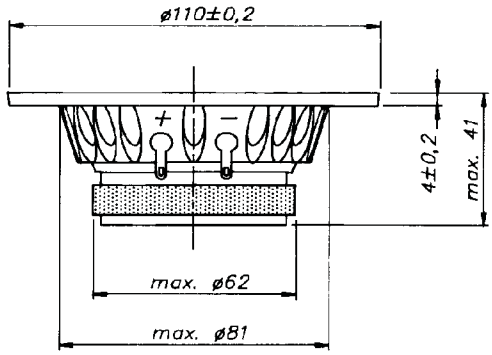

Frequency range	500 - 9000	Hz
Equivalent volume, Vas	---	L
Compliance, Cms	---	mm/N
Mechanical resistance, Rms	---	Ns/m
Effective diaphragm/cone area, Sd	43	cm2
Voice coil diameter	20	mm
Voice coil height	5.3	mm
Air gap height	4	mm
Nominal impedance	8	ohm
Voice coil resistance	5.4	ohm
Voice coil inductance	---	mH
Free air resonance, Fs	180	Hz
Sensitivity, Spl (1W,1m)/(2.83V/1m)	89/89	dB
Force factor, Bxl	3.7	Tm
Moving mass, Md	2.5	g
Qms	---	
Qes	---	
Qts	---	
Nominal power*	60	W
Short term max power*	210	W
Long term max power*	100	W

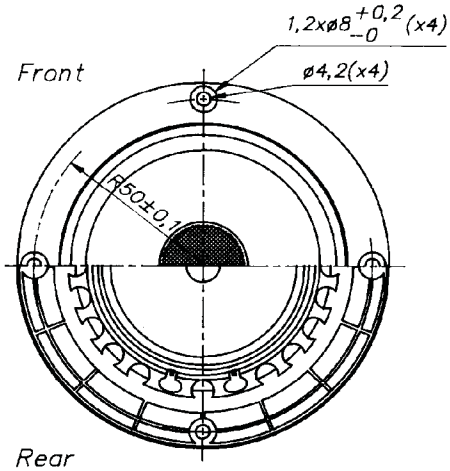

M10

* Cestello in magnesio

* Sospensione in gomma

* Membrana in carta trattata

* Doppio magnete

Riproduzione sonora neutrale

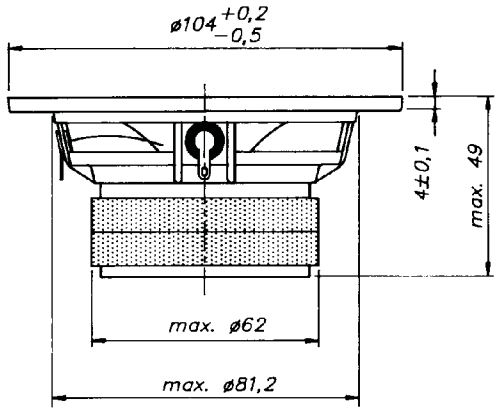

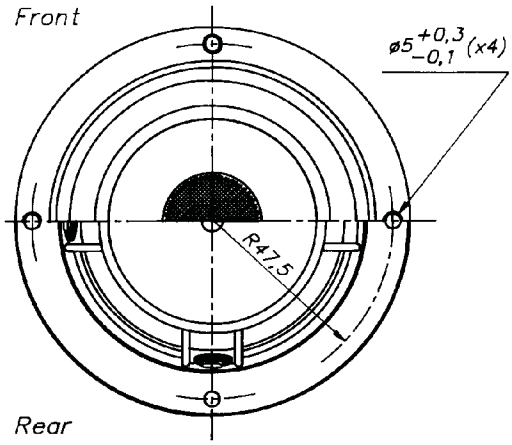

Frequency range	300 -8000	Hz
Equivalent volume, Vas	---	L
Compliance, Cms	---	mm/N
Mechanical resistance, Rms	---	Ns/m
Effective diaphragm/cone area, Sd	37	cm2
Voice coil diameter	20	mm
Voice coil height	5.3	mm
Air gap height	4	mm
Nominal impedance	8	ohm
Voice coil resistance	5.4	ohm
Voice coil inductance	---	mH
Free air resonance, Fs	110	Hz
Sensitivity, Spl (1W,1m)/(2.83V/1m)	88/88	dB
Force factor, Bxl	4.1	Tm
Moving mass, Md	2.9	g
Qms	---	
Qes	---	
Qts	---	
Nominal power*	80	W
Short term max power*	250	W
Long term max power*	120	W

C13MH

* Alta sensibilità e bassa risonanza

* Distorsione molto contenuta

* Risposta fuori asse ottimizzata

* Cono in carta trattata

* Sospensione in gomma

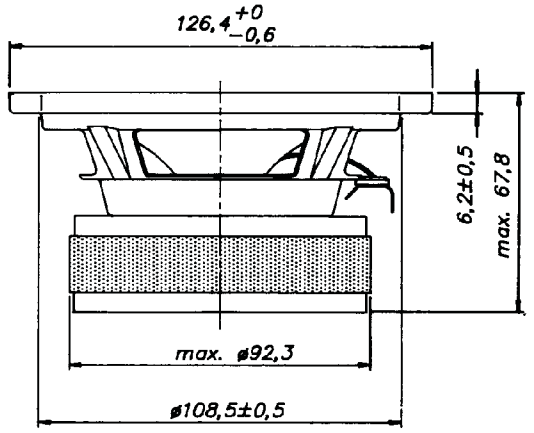

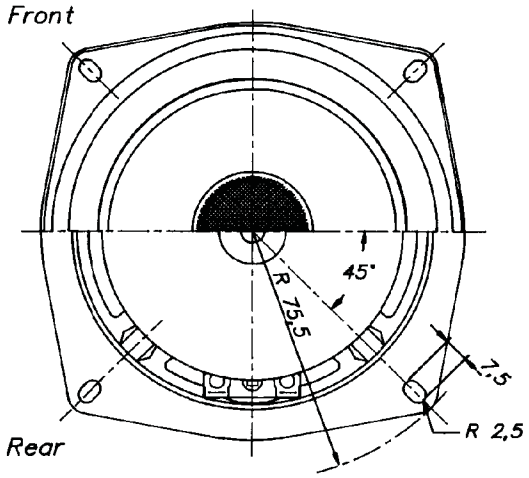

Frequency range	200 - 6000	Hz
Equivalent volume, Vas	---	L
Compliance, Cms	---	mm/N
Mechanical resistance, Rms	---	Ns/m
Effective diaphragm/cone area, Sd	79	cm2
Voice coil diameter	25	mm
Voice coil height	8	mm
Air gap height	6	mm
Nominal impedance	8	ohm
Voice coil resistance	5.8	ohm
Voice coil inductance	---	mH
Free air resonance, Fs	70	Hz
Sensitivity, Spl (1W,1m)/(2.83V/1m)	91/91	dB
Force factor, Bxl	5.9	Tm
Moving mass, Md	5.3	g
Qms	---	
Qes	---	
Qts	---	
Nominal power*	90	W
Short term max power*	280	W
Long term max power*	150	W

P11

* Cestello in magnesio

* Sospensione in gomma

* Membrana in polipropilene

* Bobina mobile ventilata tramite il magnete

* Riproduzione sonora neutrale

Frequency range	53 -6000	Hz
Equivalent volume, Vas	10.3	L
Compliance, Cms	---	mm/N
Mechanical resistance, Rms	---	Ns/m
Effective diaphragm/cone area, Sd	62	cm2
Voice coil diameter	25	mm
Voice coil height	10	mm
Air gap height	4	mm
Nominal impedance	8	ohm
Voice coil resistance	5.4	ohm
Voice coil inductance	0.6	mH
Free air resonance, Fs	53	Hz
Sensitivity, Spl (1W,1m)/(2.83V/1m)	86/86	dB
Force factor, Bxl	4.4	Tm
Moving mass, Md	4.8	g
Qms	1.43	
Qes	0.44	
Qts	0.34	
Nominal power*	30	W
Short term max power*	150	W
Long term max power*	90	W

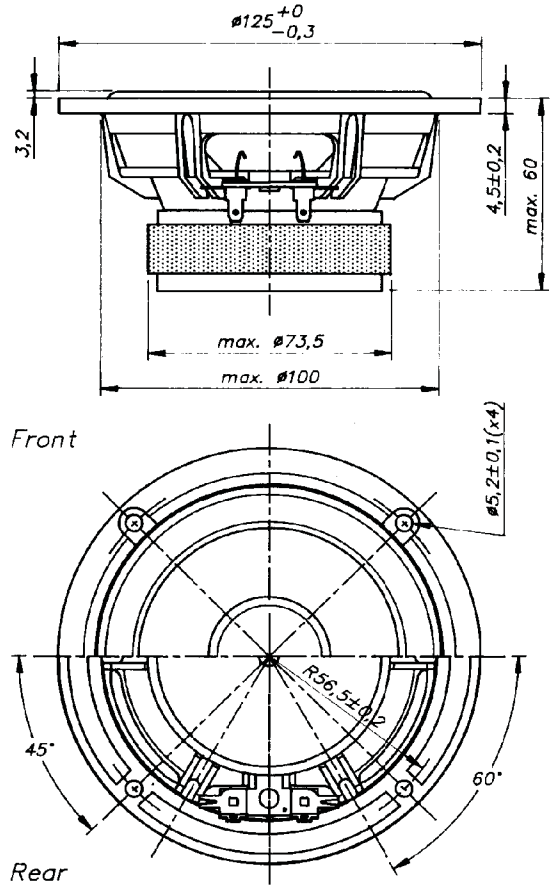

P13

* Cestello in magnesio

* Sospensione in gomma

* Membrana in polipropilene

* Bobina mobile ventilata tramite il magnete

* Riproduzione sonora neutrale

Frequency range	60 - 5000	Hz
Equivalent volume, Vas	10	L
Compliance, Cms	---	mm/N
Mechanical resistance, Rms	---	Ns/m
Effective diaphragm/cone area, Sd	86	cm2
Voice coil diameter	25	mm
Voice coil height	14	mm
Air gap height	6	mm
Nominal impedance	8	ohm
Voice coil resistance	5.7	ohm
Voice coil inductance	0.7	mH
Free air resonance, Fs	60	Hz
Sensitivity, Spl (1W,1m)/(2.83V/1m)	88/88	dB
Force factor, Bxl	6.0	Tm
Moving mass, Md	7.5	g
Qms	1.38	
Qes	0.43	
Qts	0.33	
Nominal power*	40	W
Short term max power*	190	W
Long term max power*	120	W

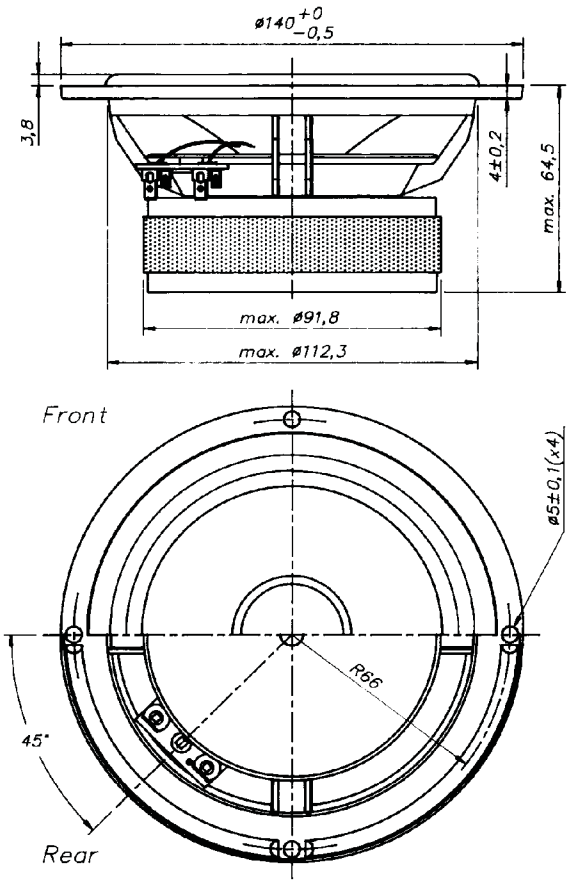

P17

* Cestello in magnesio

* Sospensione in gomma

* Membrana in polipropilene

* Bobina mobile ventilata tramite il magnete

* Ideale per bass-reflex

Frequency range	37 -5000	Hz
Equivalent volume, Vas	34.7	L
Compliance, Cms	---	mm/N
Mechanical resistance, Rms	---	Ns/m
Effective diaphragm/cone area, Sd	136	cm2
Voice coil diameter	32	mm
Voice coil height	14	mm
Air gap height	6	mm
Nominal impedance	8	ohm
Voice coil resistance	5.8	ohm
Voice coil inductance	0.55	mH
Free air resonance, Fs	37	Hz
Sensitivity, Spl (1W,1m)/(2.83V/1m)	88/88	dB
Force factor, Bxl	6.5	Tm
Moving mass, Md	14	g
Qms	1.55	
Qes	0.45	
Qts	0.35	
Nominal power*	70	W
Short term max power*	250	W
Long term max power*	120	W

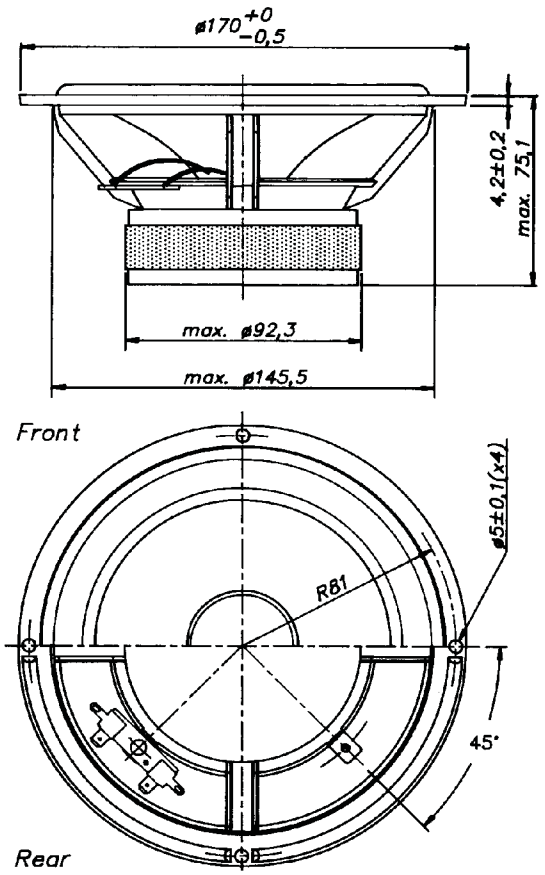

C17

* Sensibilità elevata

* Membrana in polipropilene

* Bobina mobile ventilata tramite il magnete

* Riproduzione sonora neutrale

Frequency range	60 - 5000	Hz
Equivalent volume, Vas	31	L
Compliance, Cms	---	mm/N
Mechanical resistance, Rms	---	Ns/m
Effective diaphragm/cone area, Sd	143	cm2
Voice coil diameter	25	mm
Voice coil height	10	mm
Air gap height	6	mm
Nominal impedance	8	ohm
Voice coil resistance	5.5	ohm
Voice coil inductance	0.7	mH
Free air resonance, Fs	50	Hz
Sensitivity, Spl (1W,1m)/(2.83V/1m)	89/89	dB
Force factor, Bxl	4.8	Tm
Moving mass, Md	9.5	g
Qms	4.30	
Qes	0.71	
Qts	0.61	
Nominal power*	50	W
Short term max power*	190	W
Long term max power*	120	W

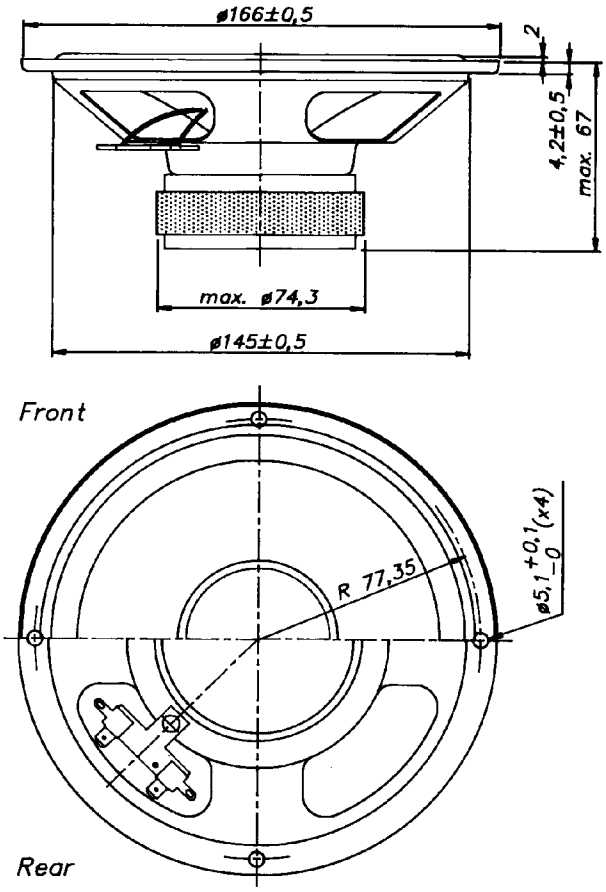

M21

* Cestello in magnesio

* Sospensione in gomma

* Membrana in carta trattata

* Corsa elevata della bobina mobile

* Ideale per bass-reflex

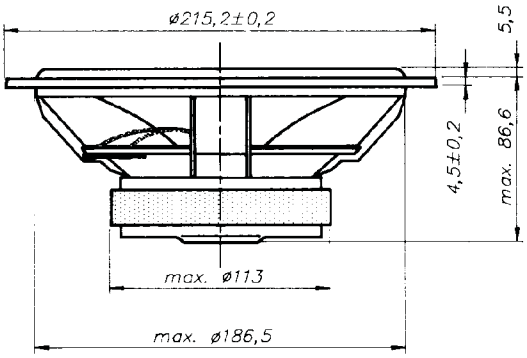

Frequency range	25 -3000	Hz
Equivalent volume, Vas	105	L
Compliance, Cms	---	mm/N
Mechanical resistance, Rms	---	Ns/m
Effective diaphragm/cone area, Sd	235	cm2
Voice coil diameter	40	mm
Voice coil height	18	mm
Air gap height	6	mm
Nominal impedance	8	ohm
Voice coil resistance	5.5	ohm
Voice coil inductance	1	mH
Free air resonance, Fs	28	Hz
Sensitivity, Spl (1W,1m)/(2.83V/1m)	90/90	dB
Force factor, Bxl	8.2	Tm
Moving mass, Md	23	g
Qms	1.97	
Qes	0.35	
Qts	0.35	
Nominal power*	80	W
Short term max power*	380	W
Long term max power*	290	W

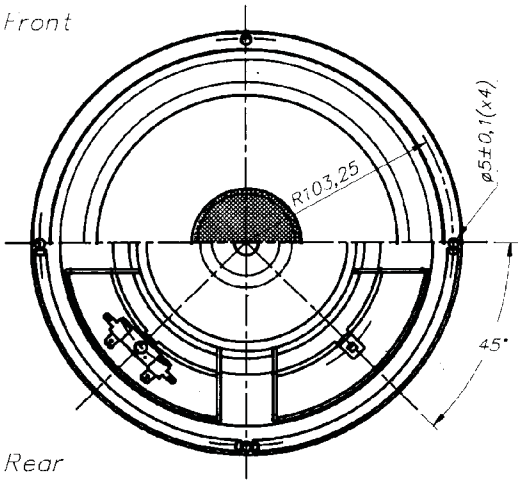

M25

* Cestello in magnesio

* Bobina mobile costituita da 4 avvolgimenti

* Cono in polpa di cellulosa trattata con materiale speciale

* Ideale per bass-reflex

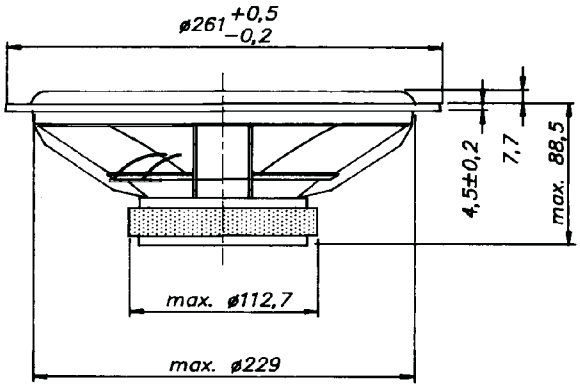

Frequency range	25 - 2000	Hz
Equivalent volume, Vas	164	L
Compliance, Cms	---	mm/N
Mechanical resistance, Rms	---	Ns/m
Effective diaphragm/cone area, Sd	346	cm2
Voice coil diameter	40	mm
Voice coil height	14	mm
Air gap height	6	mm
Nominal impedance	8	ohm
Voice coil resistance	5.7	ohm
Voice coil inductance	2.2	mH
Free air resonance, Fs	25	Hz
Sensitivity, Spl (1W,1m)/(2.83V/1m)	90/90	dB
Force factor, Bxl	11	Tm
Moving mass, Md	42	g
Qms	3.70	
Qes	0.31	
Qts	0.29	
Nominal power*	90	W
Short term max power*	390	W
Long term max power*	310	W

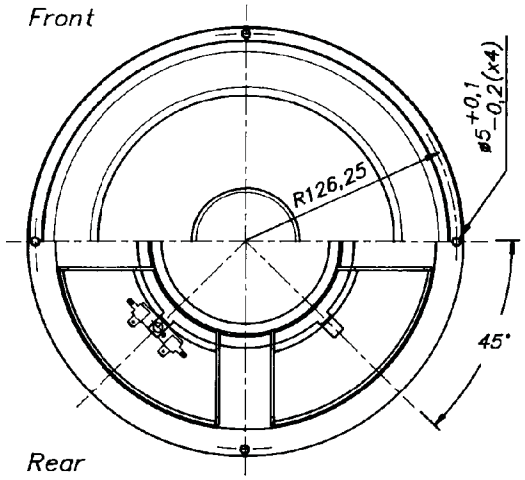

M30

* Cestello in magnesio

* Sospensione in gomma

* Membrana in carta trattata

* Corsa elevata della bobina mobile

* Ideale per bass-reflex

* Doppio magnete

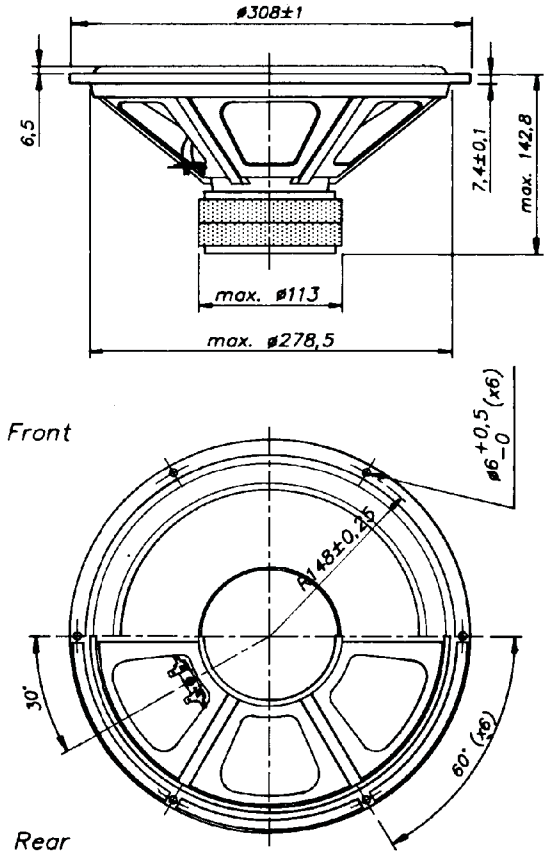

Frequency range	21 - 1000	Hz
Equivalent volume, Vas	400	L
Compliance, Cms	---	mm/N
Mechanical resistance, Rms	---	Ns/m
Effective diaphragm/cone area, Sd	513	cm2
Voice coil diameter	40	mm
Voice coil height	14	mm
Air gap height	6	mm
Nominal impedance	8	ohm
Voice coil resistance	5.7	ohm
Voice coil inductance	2.1	mH
Free air resonance, Fs	21	Hz
Sensitivity, Spl (1W,1m)/(2.83V/1m)	93/93	dB
Force factor, Bxl	12.7	Tm
Moving mass, Md	53	g
Qms	2.30	
Qes	0.25	
Qts	0.23	
Nominal power*	100	W
Short term max power*	410	W
Long term max power*	320	W

TC11

* Cestello in polimero rinforzato P6

* Cono con tecnologia NRSC e sospensione asimmetrica

* Bobina mobile ventilata attraverso il magnete

* Magneticamente schermato con doppio magnete

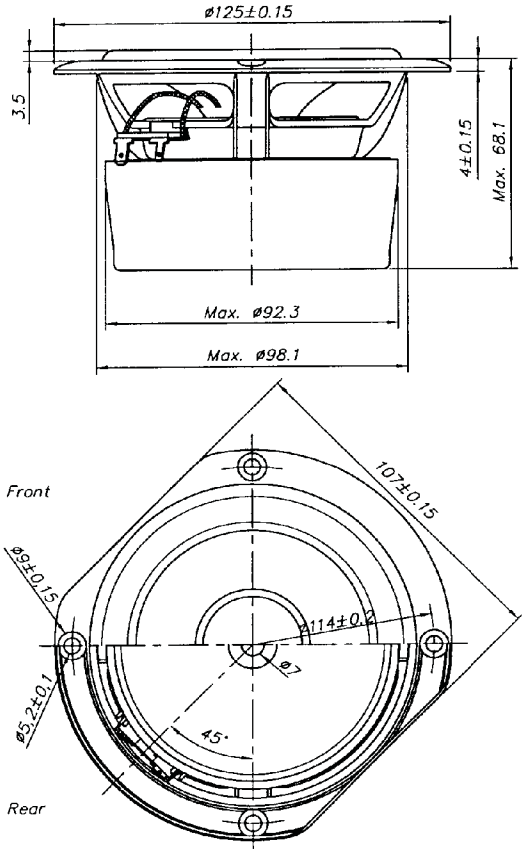

Frequency range	60 - 5000	Hz
Equivalent volume, Vas	6	L
Compliance, Cms	---	mm/N
Mechanical resistance, Rms	---	Ns/m
Effective diaphragm/cone area, Sd	58	cm2
Voice coil diameter	25	mm
Voice coil height	10	mm
Air gap height	4	mm
Nominal impedance	8	ohm
Voice coil resistance	5.5	ohm
Voice coil inductance	0.65	mH
Free air resonance, Fs	57	Hz
Sensitivity, Spl (1W,1m)/(2.83V/1m)	86/86	dB
Force factor, Bxl	5.0	Tm
Moving mass, Md	6.2	g
Qms	2.52	
Qes	0.49	
Qts	0.51	
Nominal power*	20	W
Short term max power*	90	W
Long term max power*	60	W

Tec
Professional Car Audio

4" WIDEBAND S09

SPECIAL FEATURES:

- EXCELLENT SPEECH UNDERSTANDING
- GLASS REINFORCED PLASTIC BASKET
- HIGH SENSITIVITY

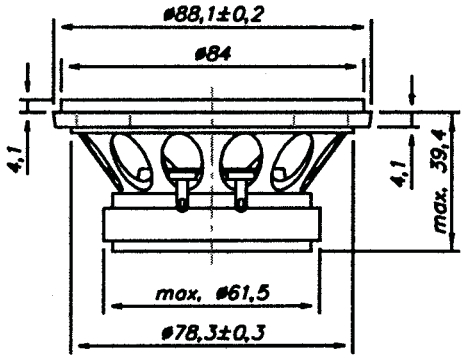

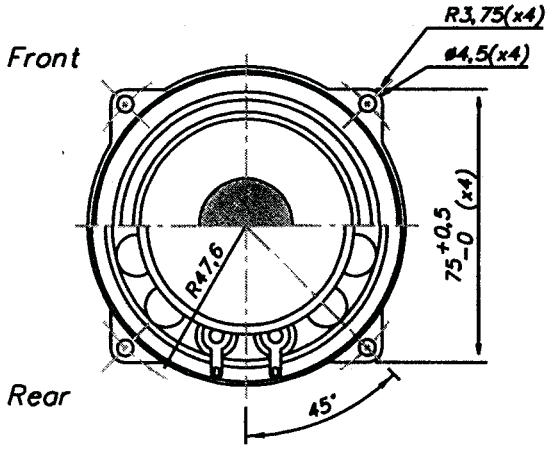

NOMINAL IMPEDANCE	4	Ω
VOICE COIL RESISTANCE	2.95	Ω
NOMINAL POWER (IEC 268-5)	5	W
OPERATING POWER	4	W
SENSITIVITY (1W, 1m)	90	dB
FREQUENCY RANGE	150-18000	Hz
FREE AIR RESONANCE	220	Hz
VOICE COIL DIAMETER	20	mm
VOICE COIL HEIGHT	4.3	mm
AIR GAP HEIGHT	2.5	mm
VOICE COIL INDUCTANCE	0.16	mH
EFFECTIVE DIAPHRAGM AREA	40	cm²
MOVING MASS (incl. air)	1.5	g
MAGNET WEIGHT	(3.7) 105	g
FORCE FACTOR, B x l	2.55	Txm
Vas	0.82	ltr
Qms	3.67	
Qes	0.91	
Qts	0.73	

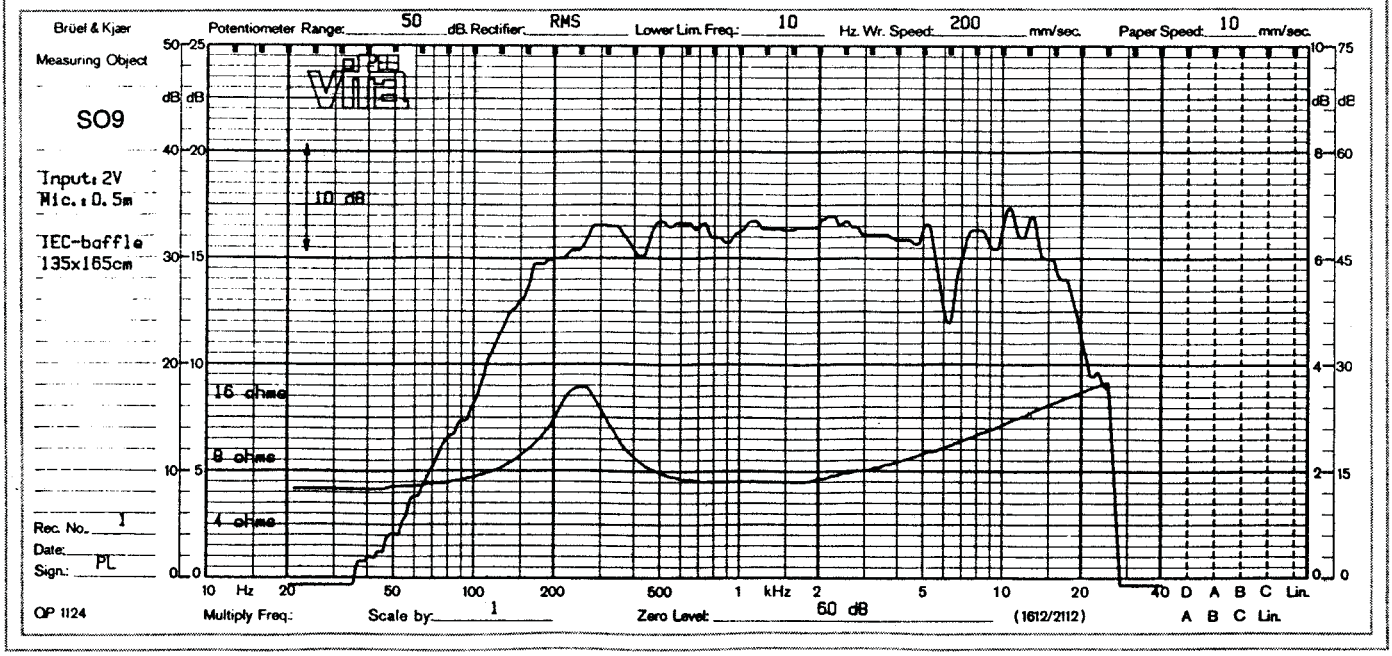

E.B. ACOUSTIC & ELECTRONIC RESEARCH S.R.L.
Via S. Bartolomeo, 10 - 28047 OLEGGIO (NO) Italy Ph. 0039 0321 91430 - Fax 0039 0321 94411
www.ebacoustic.it